GUNMAN

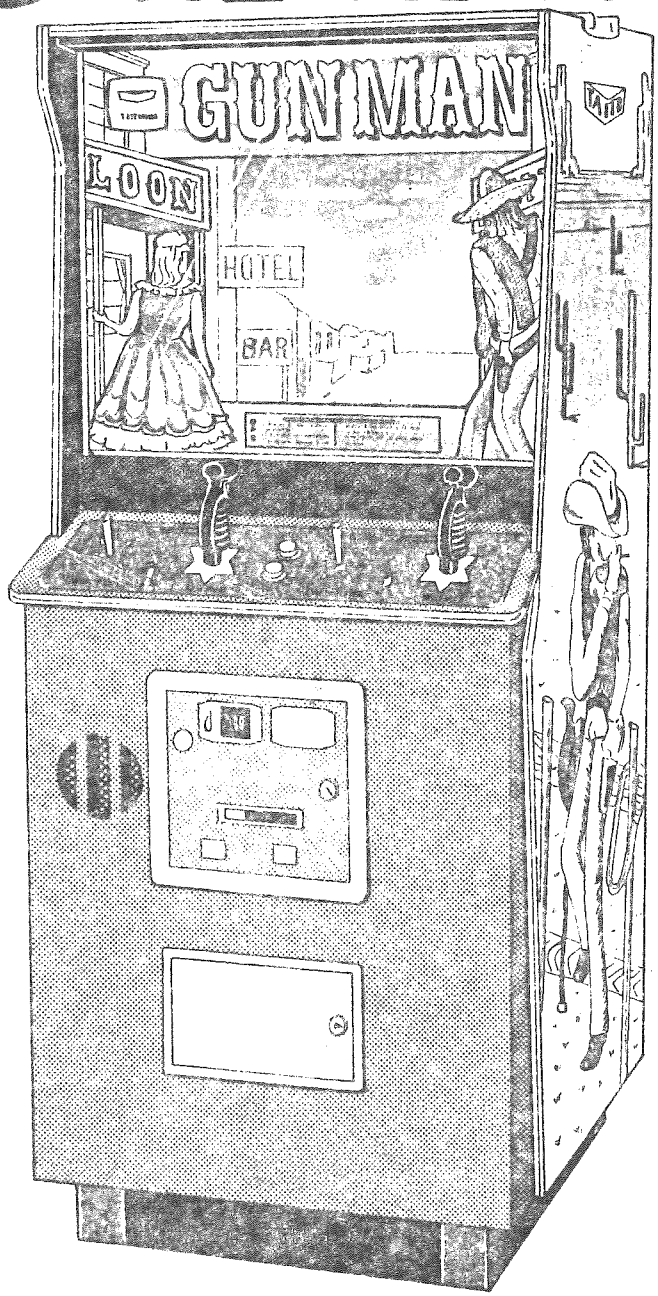

SERVICE INSTRUCTIONS AND PARTS CATALOG

TAITO

TAITO CORPORATION

GNO 70016

1. Name of Part

(See Figs. 1 and 2)

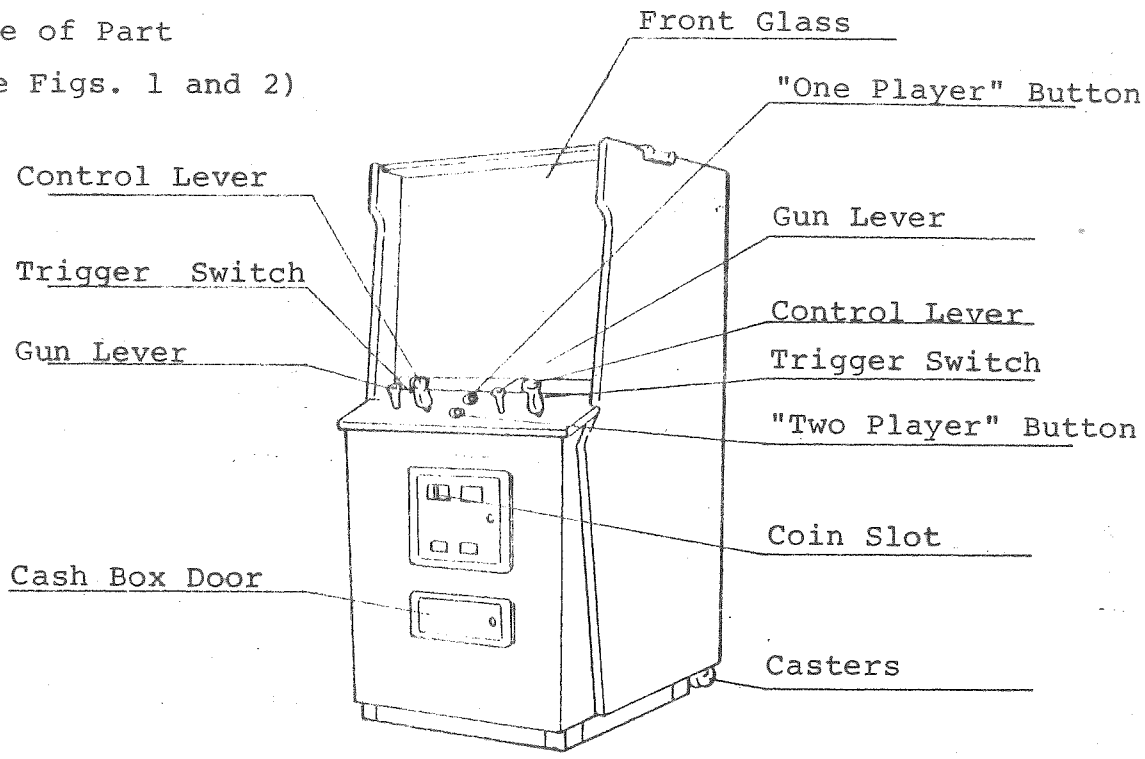

Fig. 1

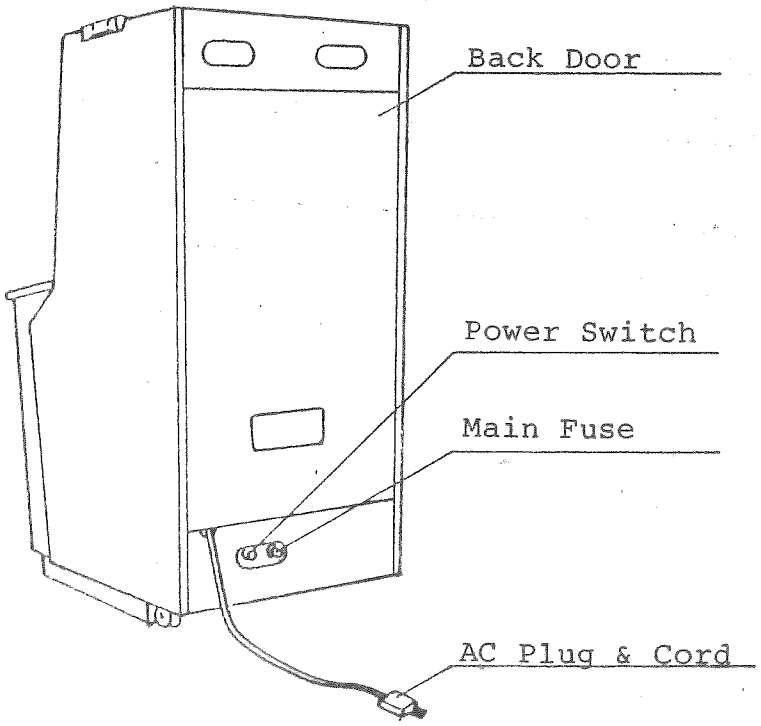

Fig. 2

2. Transportation and Installation

- Avoid rough handling in transportation; the picture tube is fragile.
- Avoid installation in location with exposure to direct sunlight or excessive heat in order to prevent the unit from rising internal temperatures.
- Ensure all connections to the PCB's are secure.
- Insert the AC plug into a proper outlet and turn the power switch on.

Note:

- Erroneous or partial score may appear on the screen when the machine is first switched on. This is typical of solid-state circuitry, and will correct itself automatically when the first play is started.

Warning:

- Taito GUN MAN uses the latest solid-state circuitry for long life, however, as with sophisticated electronic equipment certain precautions must be observed to avoid damage.

  (1) Do not attempt to service with ordinary testing device, since the internal voltage of the testing device may cause damage to the solid-state circuitry.

  (2) Never connect or disconnect any of the solid-state modules while the power is on.

3. Playing Instructions

- This game can be played by one or two players.
- Inserting a coin initiates the game play; the previous player's score is reset to "00", the game timer is reset to "90", and both gun men appear on the screen.
- Press "ONE PLAYER" or "TWO PLAYER" button.
- The gun man can be moved up or down, right or left on the screen by handling the control lever.
- Pulling the trigger on the control lever causes the gun man to shoot. Shooting direction can be changed to the high, middle, or low by moving the gun lever.
- When hit, the gun man is flashed down and two points are scored. Soon after that the gun man is reset and can fight again.
- Bullets ricochet when they hit the wagon or barrels.
- The game ends when the game timer reaches "00".

Game Action:

- The ricocheting direction of a bullet depends on the point where the bullet hits.
- The selection for "ONE PLAYER" or "TWO PLAYER" game can be made even after the game started.
- If played as "ONE PLAYER" game, use the right player position; the game computer is opponent and operates the gun man.
- During playing six kinds of effective sounds will be heard from the game cabinet speaker.
- The next shot cannot be made until the former shooting disappears from the screen.

4. Adjustments on Main P.C. Board
(See Fig. 3)

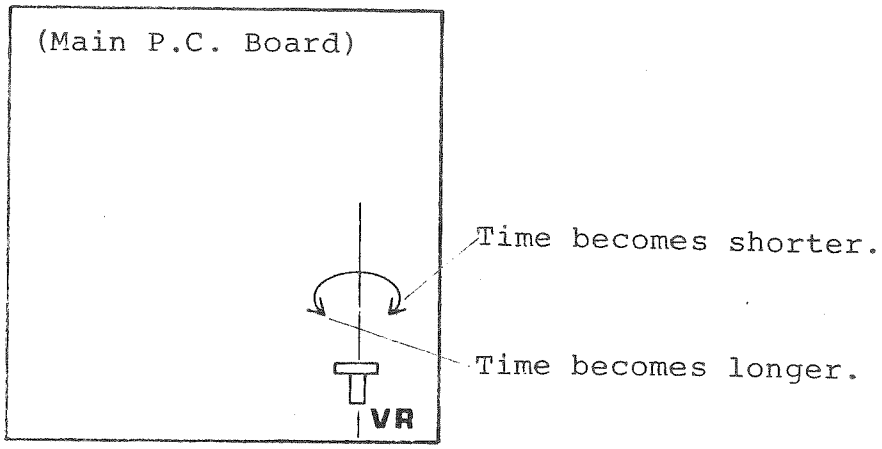

Fig. 3

° VR ... Pot for Adjusting Game Timer

The adjustable range of the game length is approximately from 90 to 150 seconds. The game length is preset at about 120 seconds at the factory.

5. Adjustments on Sound P.C. Boards
(See Fig. 4)

° VR1 ... Volume Pot for Step(A)
° VR2 ... Volume Pot for Step(B)
° VR3 ... Volume Pot for Flashing
° VR4 ... Tone Pot for Flashing
° VR5 ... Volume Pot for Hit
° VR6 ... Tone Pot for Hit
° VR7 ... Volume Pot for Shooting
° VR8 ... Volume Pot for Richocheting
° VR9 ... Tone Pot for Richocheting

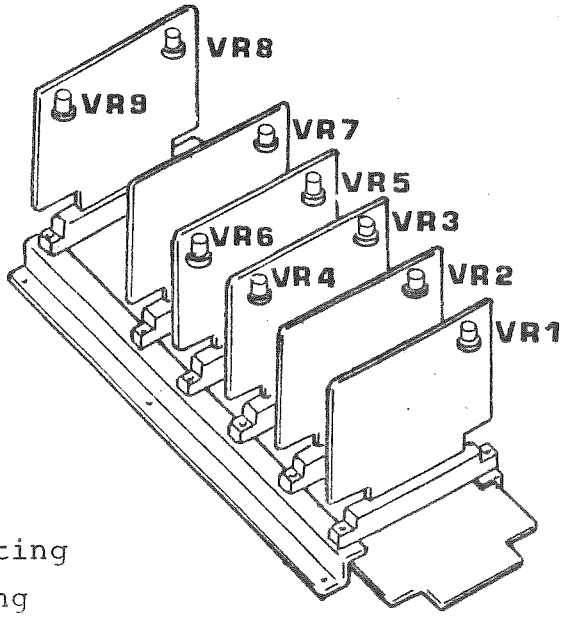

Fig. 4

6. Adjustments on TV Monitor
(See Fig. 5)

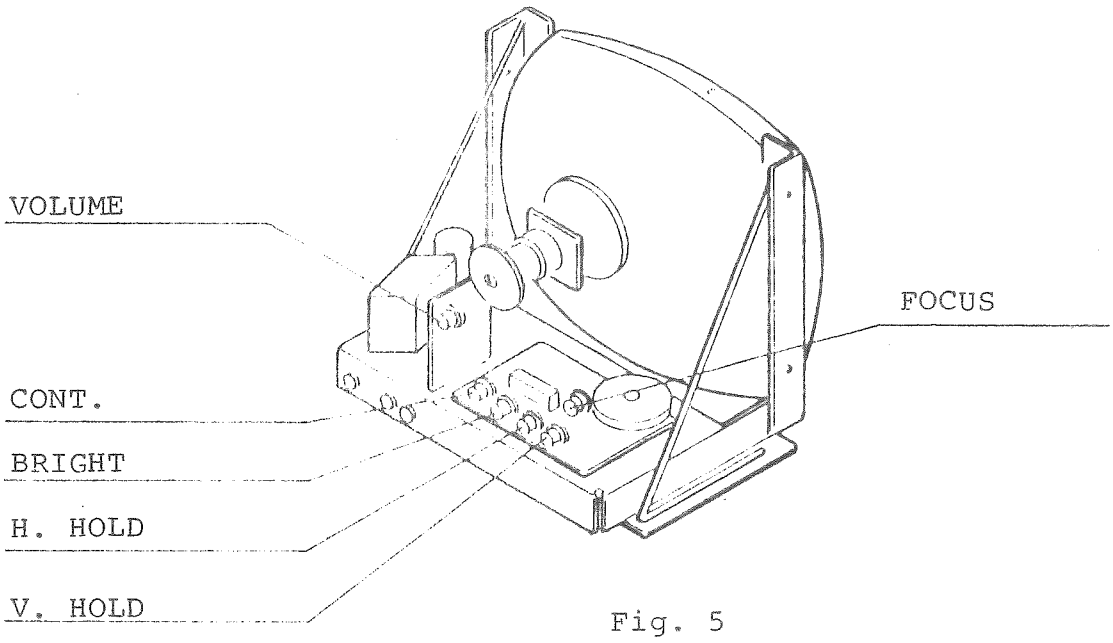

Fig. 5

The TV monitor is properly adjusted before shipping, however, if necessary, readjust it as follows:

- Sound Volume
  Adjust the VOLUME control so as to suit the location noise level.
- Horizontal Hold
  Adjust the H. Hold control if the picture is warped or broken into diagonal lines.
- Vertical Hold
  Adjust the V. Hold control if the picture rolls vertically across the screen.
- Screen Contrast and Brightness
  Adjust the CONT. and the BRIGHT controls to keep the screen clear.
- FOCUS .... Screen Focus Control

Note: The TV monitor of Taito GUN MAN is for exclusive use, therefore, it can not be replaced with that of other models.

7. Adjustments of Supply Voltage
(See Fig. 6)

If the voltage of the power supply is low, the picture on the screen sometimes flickers. In that case, change the terminal of the power transformer in the game cabinet. This adjustment is obtained by using the change-over switch.

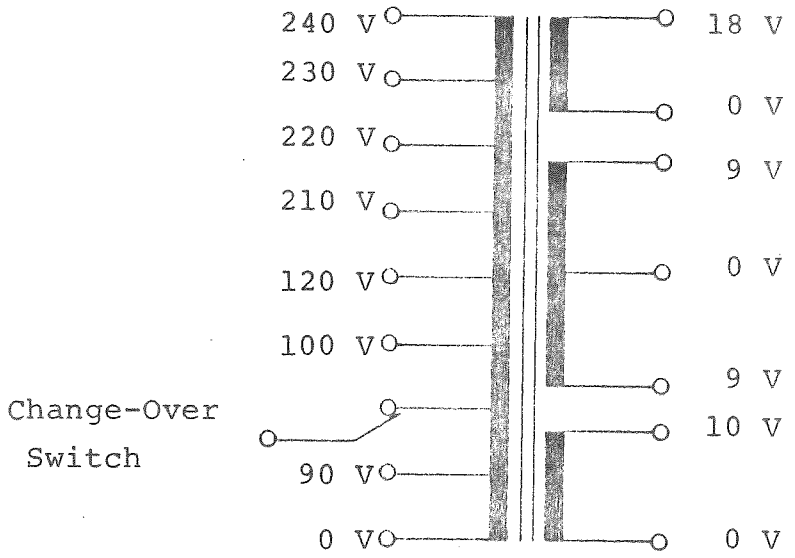

Fig. 6

CABINET ACCESSORY ASS'Y

See page 15

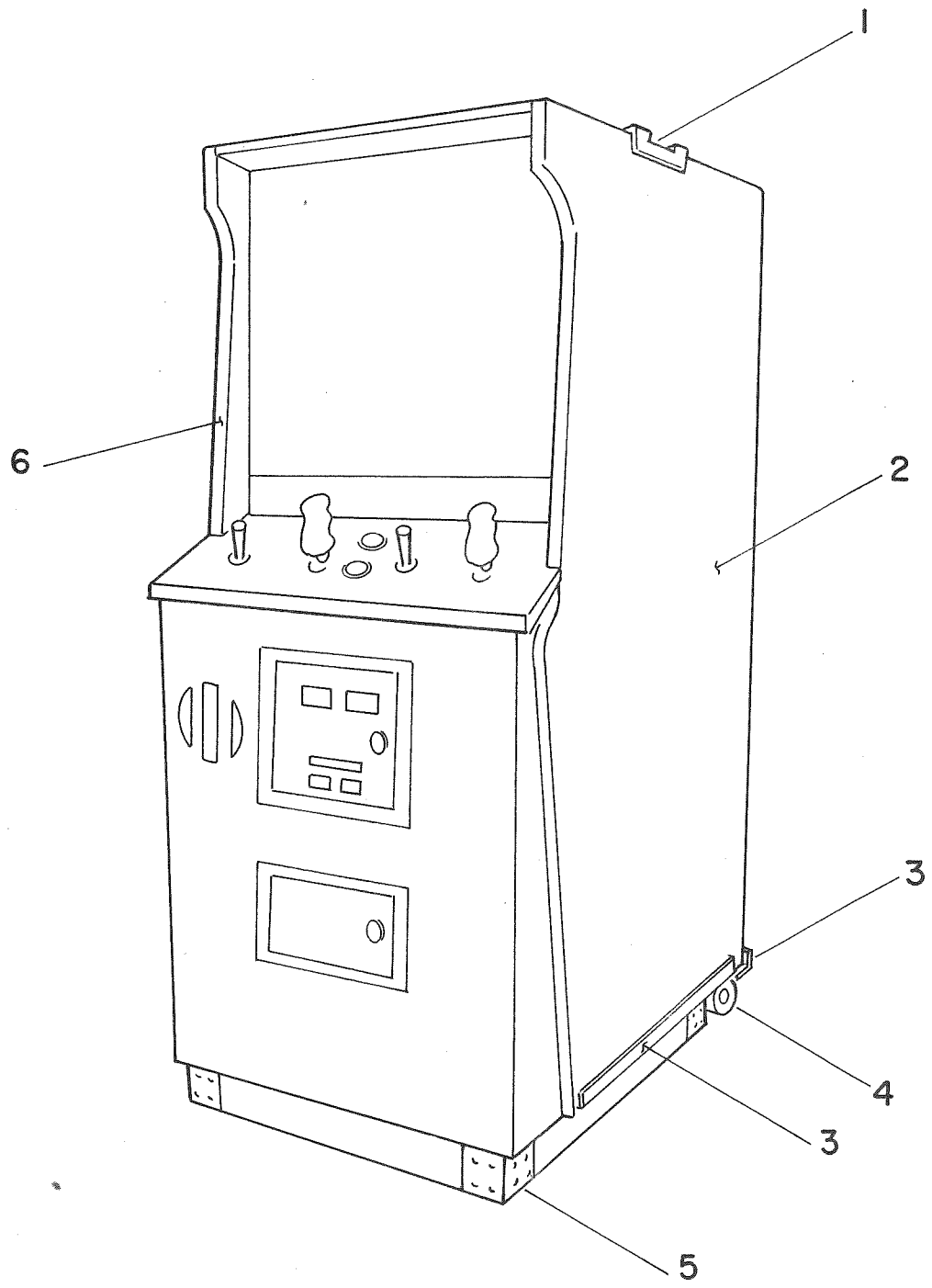

CABINET ASS'Y

See pages 15, 16

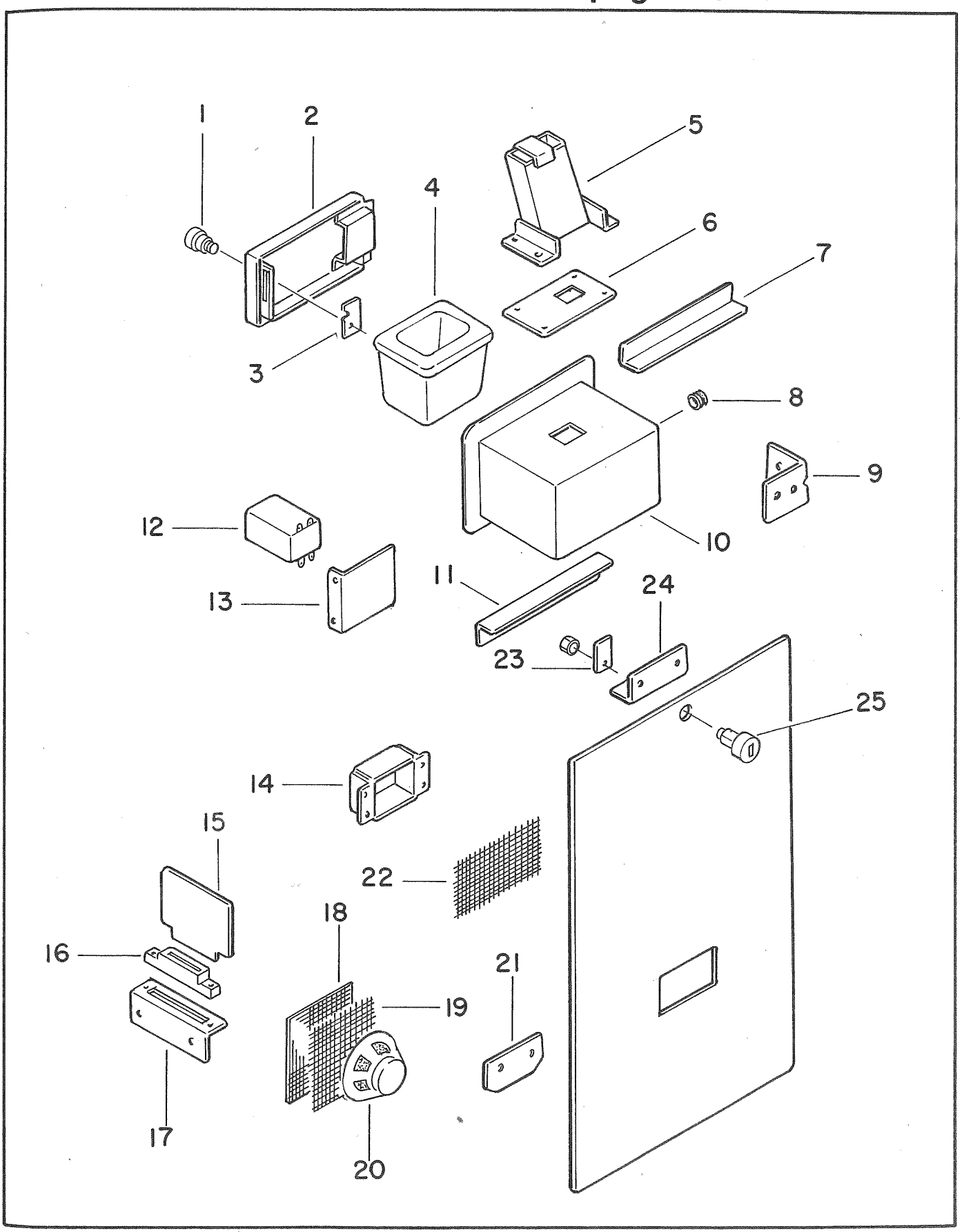

CONTROL PLATE ASS'Y

See pages 16,17,18

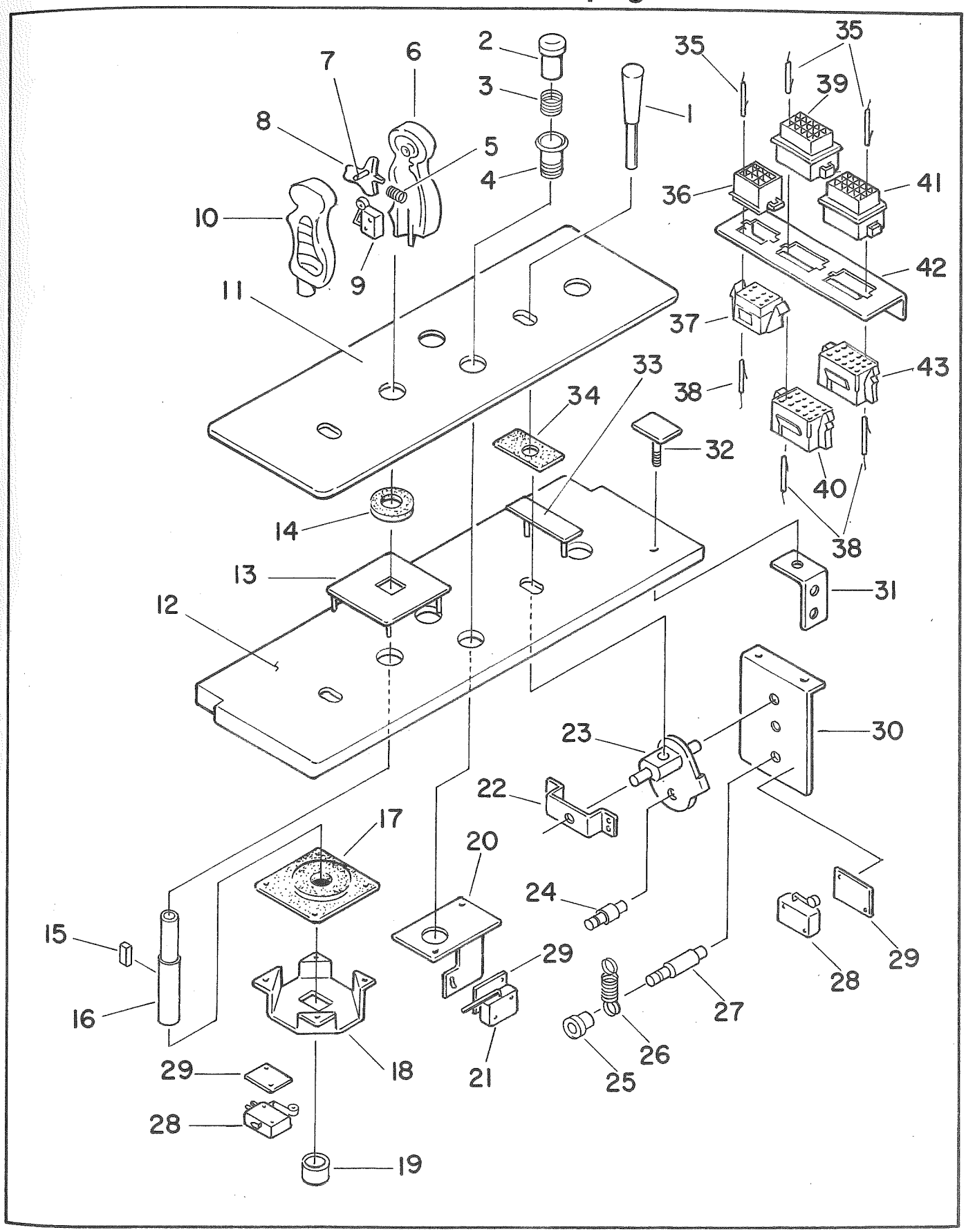

PLAYFIELD ASS'Y

See page 19

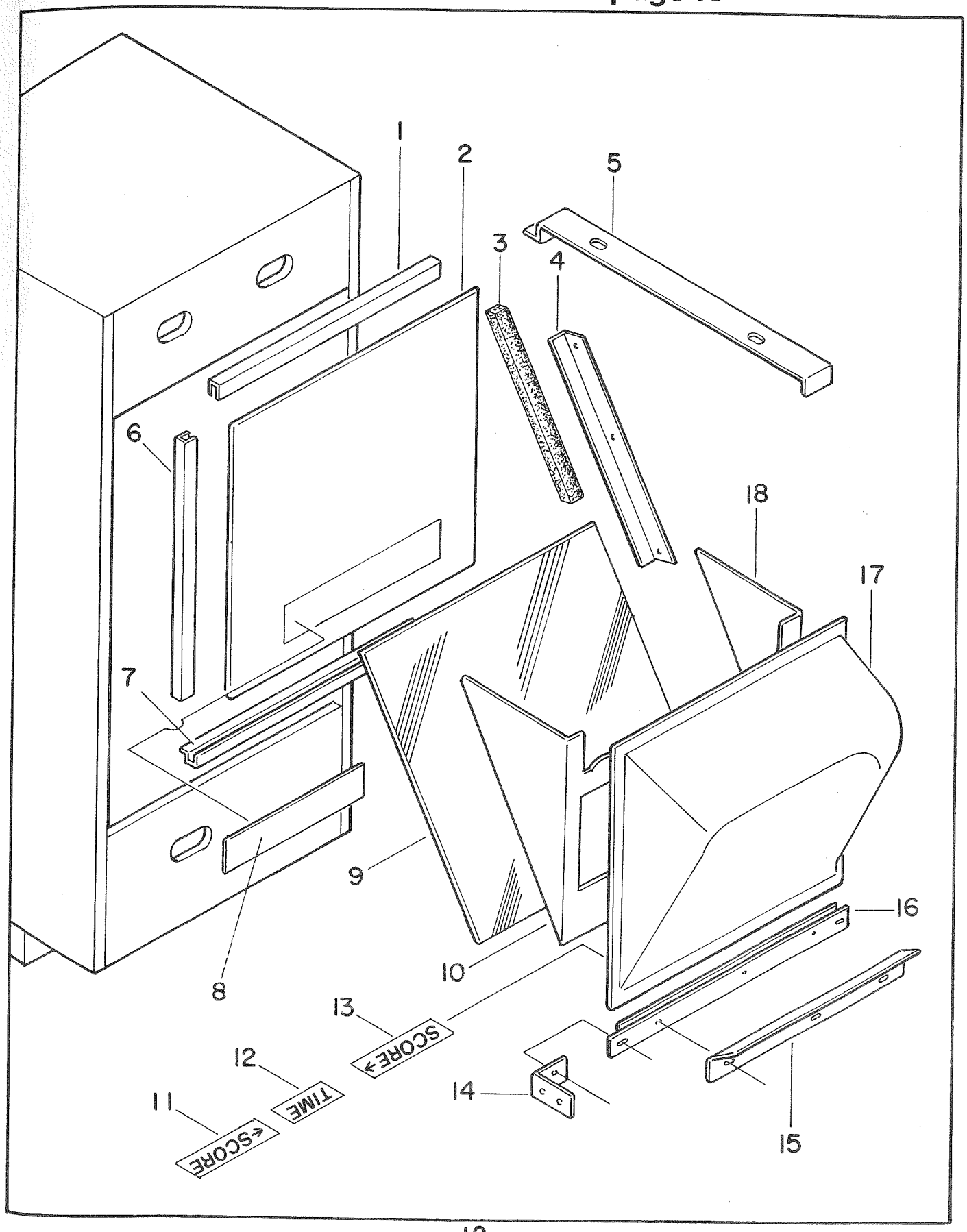

VIDEO AND FLUORESCENT LAMP ASS'Y

See pages 20,21

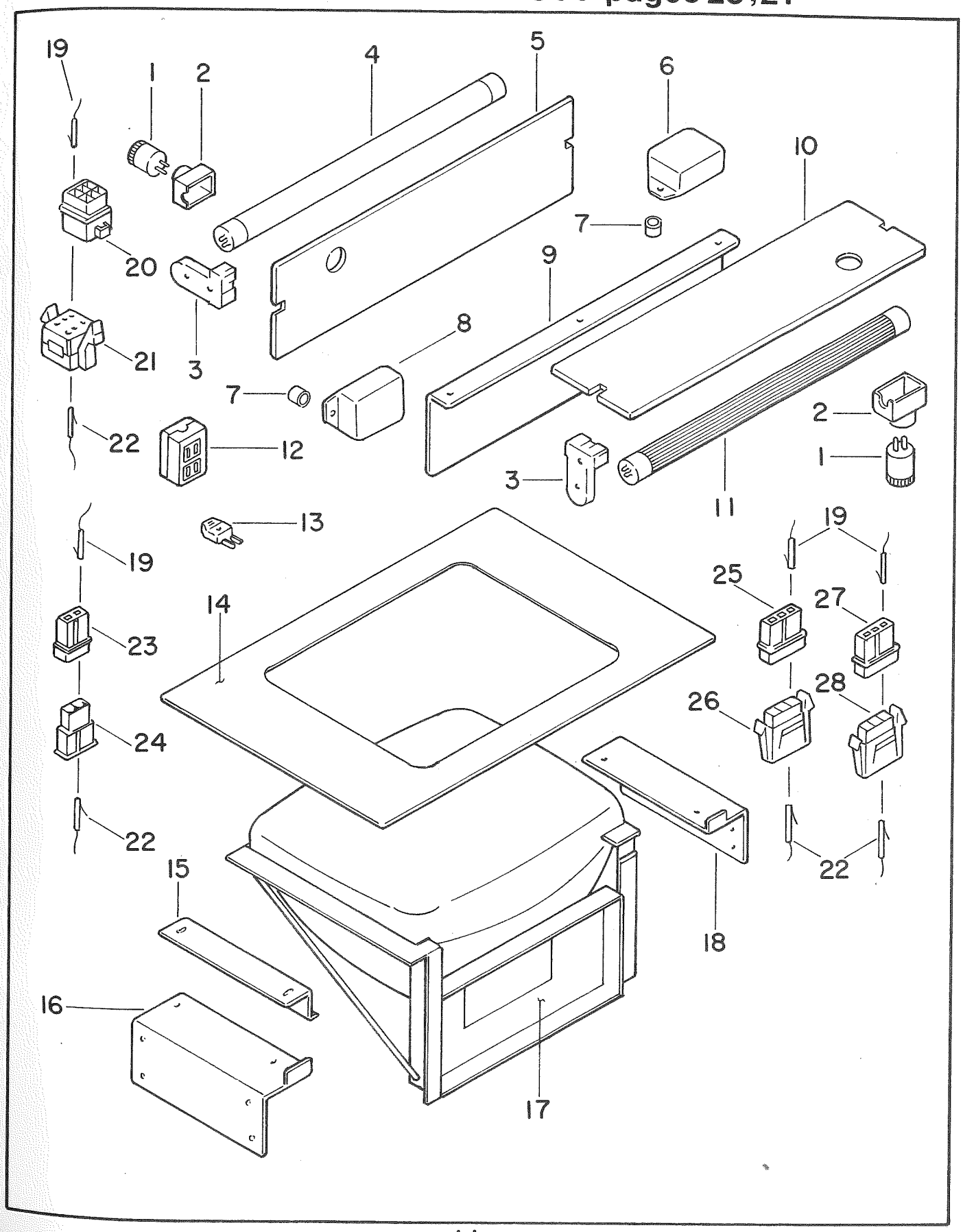

PRINTED BOARD ASS'Y

See pages 21,22

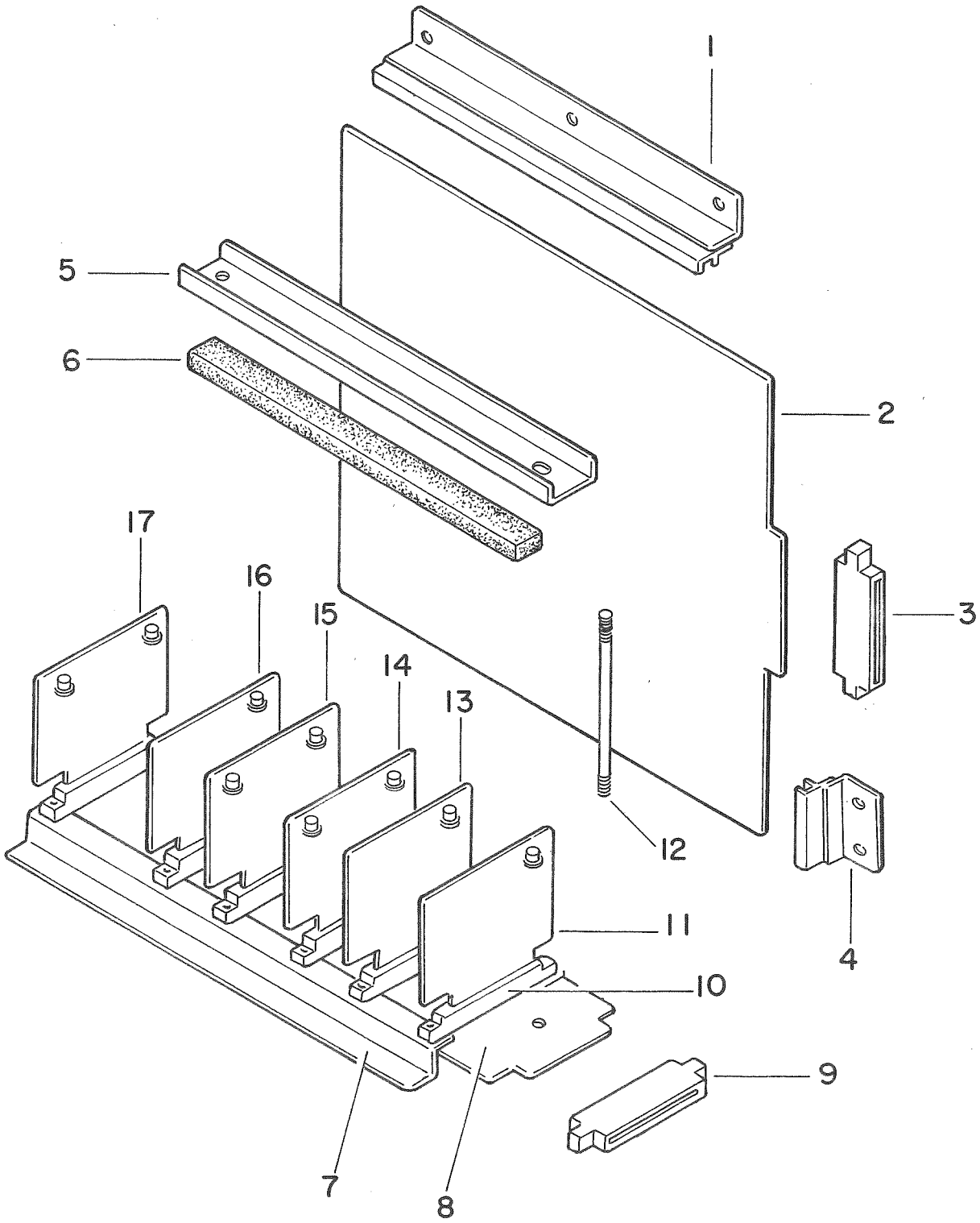

REGULATOR ASS'Y

See pages 22,23,24

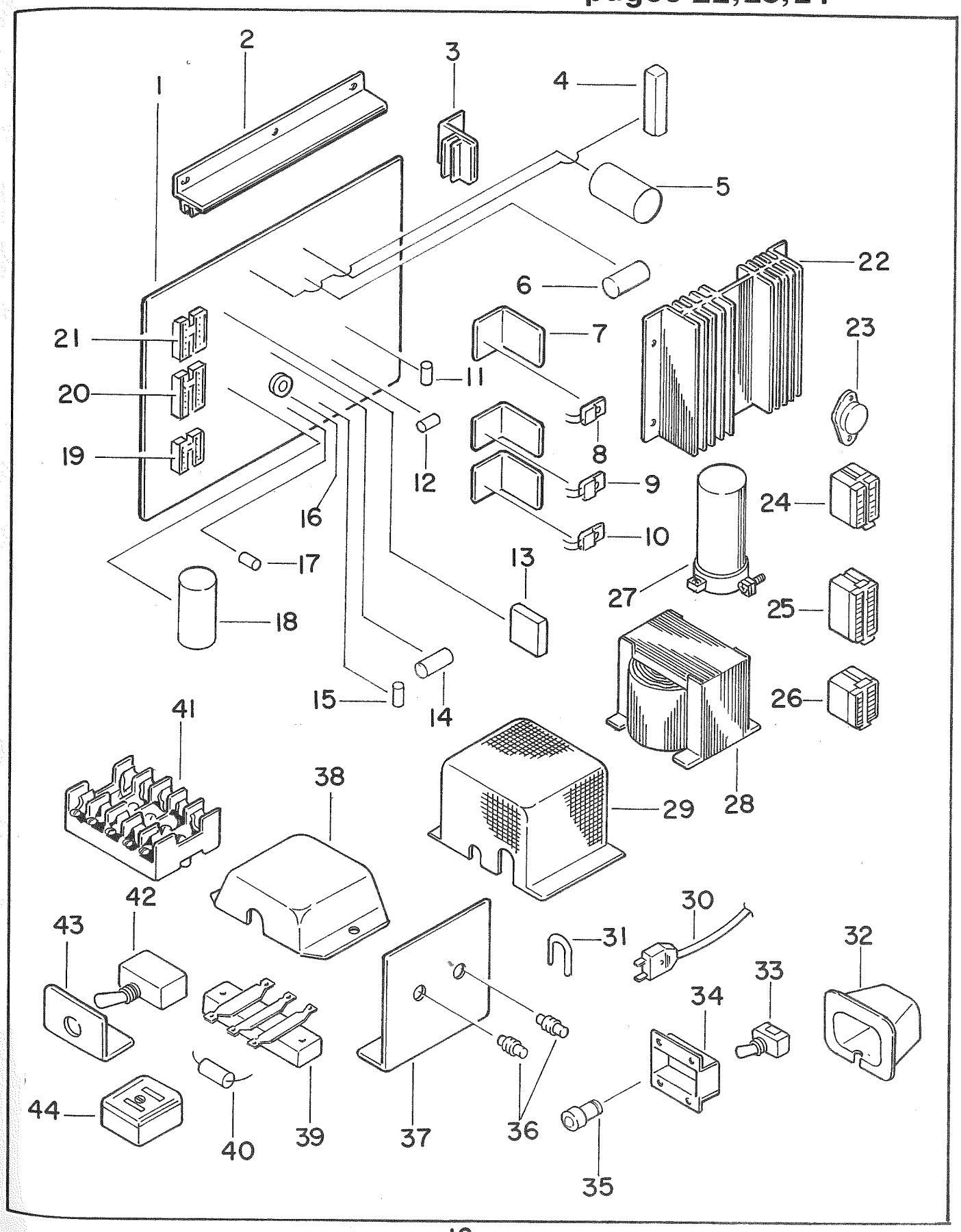

FRONT DOOR AND COIN MECHANISM ASS'Y

See pages 24,25,26

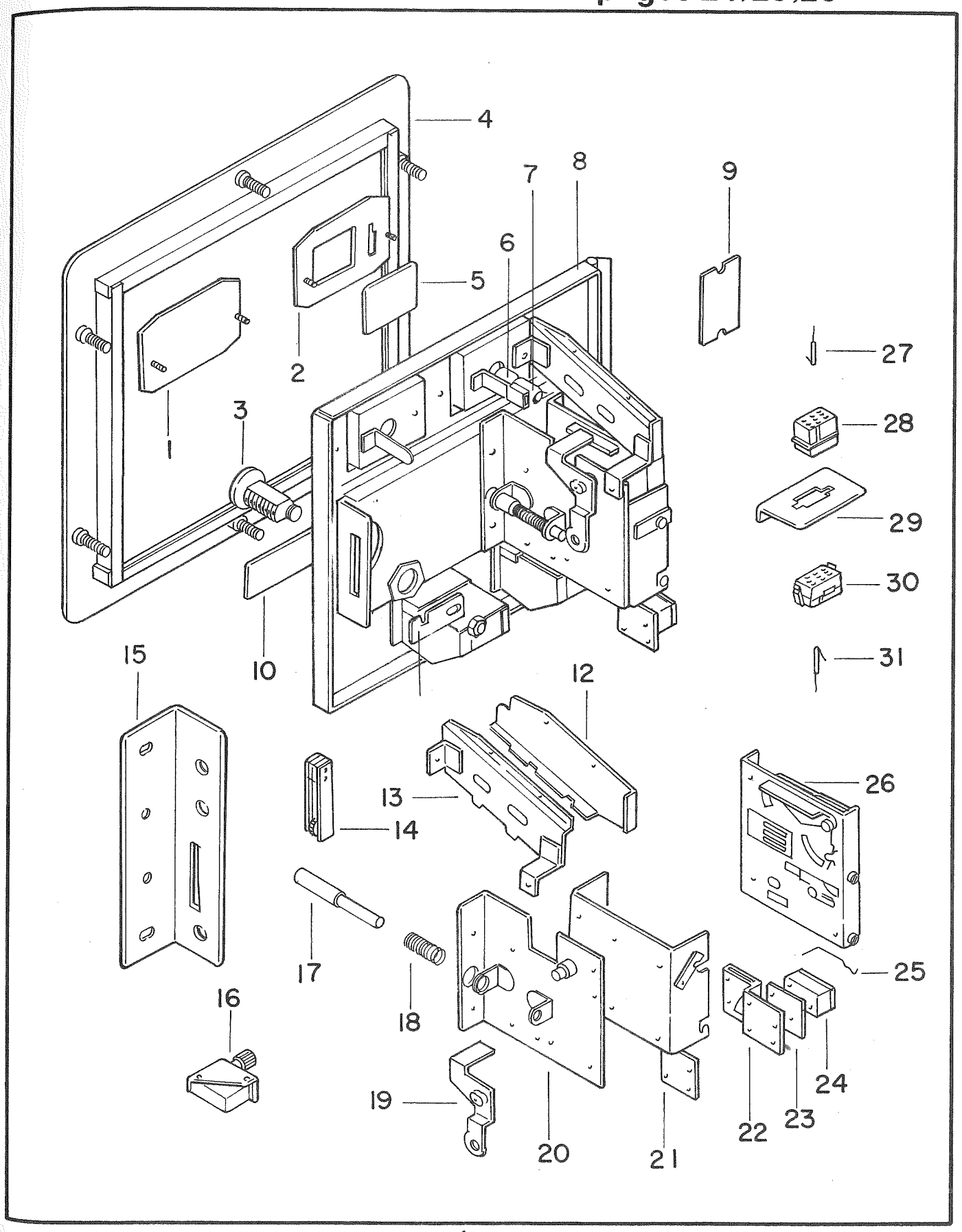

CABINET ACCESSORY ASS'Y

Item	Part №	Description
1	AAO14511	Molding
2	GNO10001	Cabinet
3	BPO40002	Corner Protector
4	AAO16513	Caster
5	AAO13519	Corner Bracket
6	AAO19524	Edge

CABINET ASS'Y

Item	Part №	Description
1	AAO16545	Lock & Key
2	AAO26512	Cash Box Door
3	AAO13583	Lock Plate
4	AAO28504	Cash Case
5	AAO25509	Coin Chute
6	AAO13582	Plate
7	AAO13580	Cash Box Guide (B)
8	AAO18504	Grommet
9	AAO13584	Support Bracket

10	AAO28505	Cash Box
11	AAO13579	Cash Box Guide (A)
12	AAO51615	Counter
13	AAO13581	Counter Bracket
14	AAO13512	Cover
15	AAM50007	Counter Drive P.C.Board Ass'y
16	AAO55720	Connector
17	AAO13586	Connector Bracket
18	AAO13562	Ventilator
19	AAO19526	Net
20	AAT71011	Speaker
21	AAO13523	Door Stopper
22	EPO30010	Ventilator
23	AAO13510	Lock Plate
24	AAO13569	Lock Guide B
25	AAO16543	Lock & Key

CONTROL PLATE ASS'Y

Item	Part No.	Description
1	WNO20004	Stick
2	AAO19533	Push Button

3	BPO50001	Spring
4	AAO19534	Push Botton Housing
5	WNO50002	Trigger Spring
6	AVO40008	Grip (L)
7	WNO20007	Trigger Shaft
8	WNO40009	Trigger
9	AAO52550	Switch
10	AVO40009	Grip (R)
11	GNO70007	Control Panel
12	GNO10002	Control Board
13	SAO30003	Lock Plate
14	SAO90001	Mask
15	SPO20010	Key
16	SAO20001	Control Lever
17	AAO18549	Rubber
18	SAO30002	Switch Mounting Bracket
19	SAO20002	Hub
20	BPO30002	Push Switch Bracket
21	AAO52531	Switch
22	WNO30007	Stopper Bracket
23	WNO30004	Cam
24	WNO20002	Spring Hook (B)
25	WNO20003	Collar

26	WNO50001	Spring
27	WNO20001	Spring Hook (A)
28	AAO52532	Switch
29	AAO19504	Insulator
30	SAO30001	Switch Base
31	BPO30018	Lock Stopper
32	BPO30004	Lock Plate
33	WNO30005	Lock Plate
34	WNO30006	Slide Plate
35	AAO55789	Mate-N-Lok Plug Pin
36	AAO55585	Mate-N-Lok Cap 9P
37	AAO55586	Mate-N-Lok Plug 9P
38	AAO55790	Mate-N-Lok Socket Pin
39	AAO55625	Mate-N-Lok Cap 15P
40	AAO55626	Mate-N-Lok Plug 15P
41	AAO55621	Mate-N-Lok Cap 15P
42	GNO30005	Socket Bracket
43	AAO55622	Mate-N-Lok Plug 15P

PLAYFIELD ASS'Y

Item	Part №	Description
1	BPO30019	Glass Retainer Top
2	GNO70005	Front Glass
3	AAO18552	Rubber
4	MSO30005	Glass Retaining Bracket
5	BPO30023	Lock Plate
6	BPO30020	Glass Retainer Side
7	BPO30021	Glass Retainer Bottom
8	GNO70013	Instructions Card
9	GNO90013	Half Mirror
10	GNO70008	Decoration Board (R)
11	GNO70011	Score Sticker (W)
12	GNO70010	Time Sticker
13	GNO70012	Score Sticker (B)
14	GNO30004	Side Bracket
15	GNO30002	Playfield Bottom Plate
16	GNO30001	Mirror Bottom Plate
17	GNO70006	Playfield
18	GNO70009	Decoration Board (L)

VIDEO AND FLUORESCENT LAMP ASS'Y

Item	Part №	Description
1	AAO54720	Glow Lamp
2	AAO55695	Glow Socket
3	AAO55694	F L Socket
4	AAO54711	Fluorescent Lamp
5	BPO10003	F L Board
6	AAO57505	Ballast 20W
7	AAO12510	Spacer
8	AAO57504	Ballast 15W
9	GNO30003	F L Cover
10	GNO10003	F L Board
11	AAO54716	Black Light Lamp
12	AAO55716	A C Socket
13	AAO55713	A C Plug
14	GNO90012	Mask
15	AAO13590	T V Bracket
16	BKO30002	Base Bracket L
17	GNO90014	Video
18	BKO30003	Base Bracket R
19	AAO55789	Mate-N-Lok Plug Pin
20	AAO55561	Mate-N-Lok Cap 6P

21	AAO55562	Mate-N-Lok Plug 6P
22	AAO55790	Mate-N-Lok Socket Pin
23	AAO55501	Mate-N-Lok Cap 2P
24	AAO55502	Mate-N-Lok Plug 2P
25	AAO55521	Mate-N-Lok Cap 3P
26	AAO55522	Mate-N-Lok Plug 3P
27	AAO55525	Mate-N-Lok Cap 3P
28	AAO55526	Mate-N-Lok Plug 3P

PRINTED BOARD ASS'Y

Item	Part No.	Description
1	AAO19529	P.C.Board Guide C
2	GNN00001	Main P.C.Board Ass'y
3	AAO55952	Connector 28P
4	AAO19527	P.C.Board Guide A
5	AAO13564	Plate
6	AAO18548	Rubber
7	AAO13563	Side Bracket
8	BKN00005	Sound Mother P.C.Board Ass'y
9	AAO55950	Connector 22P
10	AAO55962	Connector 22P

11	GNN00002	Effect Sound (Step.A) P.C. Board Ass'y
12	AAO12550	Shaft
13	GNN00003	Effect Sound (Step.B) P.C. Board Ass'y
14	GNN00004	Effect Sound (Flash) P.C. Board Ass'y
15	GNN00005	Effect Sound (Hit) P.C. Board Ass'y
16	SAN00006	Effect Sound (Hunting Gun) P.C.Board Ass'y
17	GNN00006	Effect Sound (Spring) P.C. Board Ass'y

REGULATOR ASS'Y

Item	Part No.	Description
1	AAM60001	Power P.C.Board Ass'y
2	AAO19529	P.C.Board Guide (C)
3	AAO19527	P.C.Board Guide (A)
4	AAT55043	Resistor
5	AAT41580	Capacitor
6	AAT41114	Capacitor
7	AAO13565	Heat Sink
8	AAT31025	Regulator
9	AAT31015	Regulator
10	AAT11040	Transistor
11	AAT51037	Resistor

12	AAT51065	Resistor
13	AAT14023	Rectifier
14	AAT41095	Capacitor
15	AAT51323	Resistor
16	AAT53051	Potention Meter
17	AAT41434	Capacitor
18	AAT41116	Capacitor
19	AAO55866	Pin Header Ass'y 10P
20	AAO55886	Pin Header Ass'y 16P
21	AAO55876	Pin Header Ass'y 12P
22	AAO69545	Heat Sink
23	AAT11039	Transistor
24	AAO55926	Socket Housing 12P
25	AAO55936	Socket Housing 16P
26	AAO55916	Socket Housing 10P
27	AAT41658	Capacitor
28	AAO57547	Transformer
29	AAO13588	Transformer Cover
30	AAO62501	A C Cable & Plug Ass'y
31	AAO69525	Grommet
32	AAO19519	Cover
33	AAO52501	Switch
34	AAO13551	Switch Bracket

35	AAO55784	Fuse Holder
36	AAT12035	Diode
37	AAO13566	Heat Sink
38	AAO19520	Cover
39	AAO56511	Contact Strip Ass'y 3P
40	AAT41194	Capacitor
41	AAO55804	Fuse Holder
42	AAO52535	Switch
43	AAO13585	Switch Bracket
44	AAO55715	A C Socket

FRONT DOOR AND COIN MECHANISM ASS'Y

Item	Part №	Description
1	AAO21530	Coin Shield Plate
2	AAO21533	Coin Entry Plate
3	AAO16543	Lock & Key
4	AAO26510	Door Frame
5	AAO29508	Price Lable ¥100
6	AAO54704	Lamp 12V 150mA
7	AAO55698	Lamp Socket
8	AAO26511	Front Door

9	AA019522	Cover Plate
10	AA017705	Name Plate
11	AA013578	Lock Plate
12	AA025508	Coin Guide (B)
13	AA025507	Coin Guide (A)
14	AA068717	Blade Switch
15	AA013577	Lock Guard
16	AA052511	Switch
17	AA027504	Push Button
18	AA015504	Spring
19	AA013557	Scavenger
20	AA013554	Mounting Bracket
21	AA023501	Slug Rejector Mounting Bracket Ass'y
22	AA025503	Coin Guide
23	AA019502	Insulator
24	AA052512	Switch
25	AA053501	Actuator
26	AA022503	Slug Rejector ¥100
27	AA055789	Mate-N-Lok Plug Pin
28	AA055581	Mate-N-Lok Cap 9P
29	AA013527	Socket Bracket

30	AA055582	Mate-N-Lok Plug 9P
31	AA055790	Mate-N-Lok Socket Pin
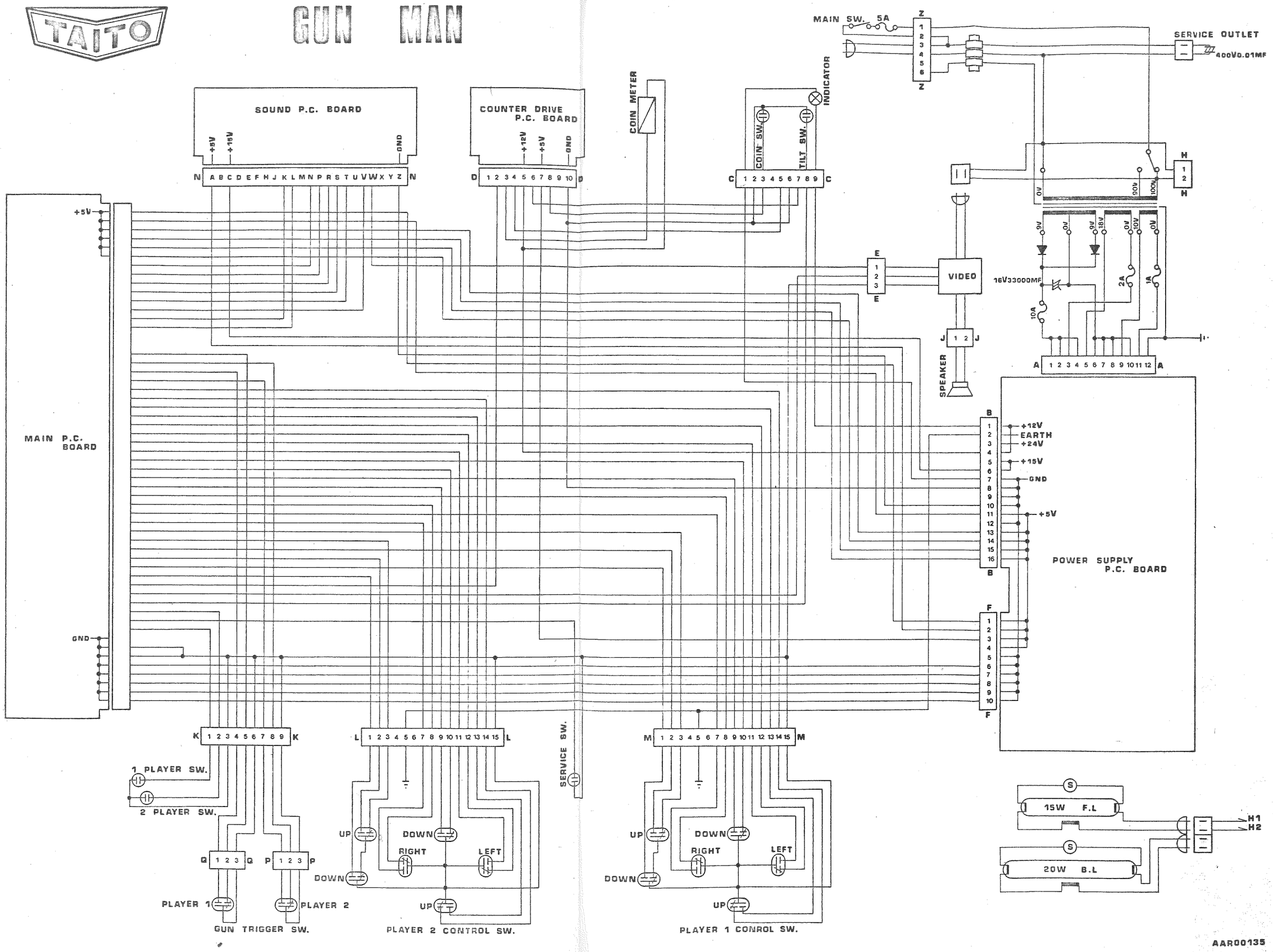
TAITO GUN MAN